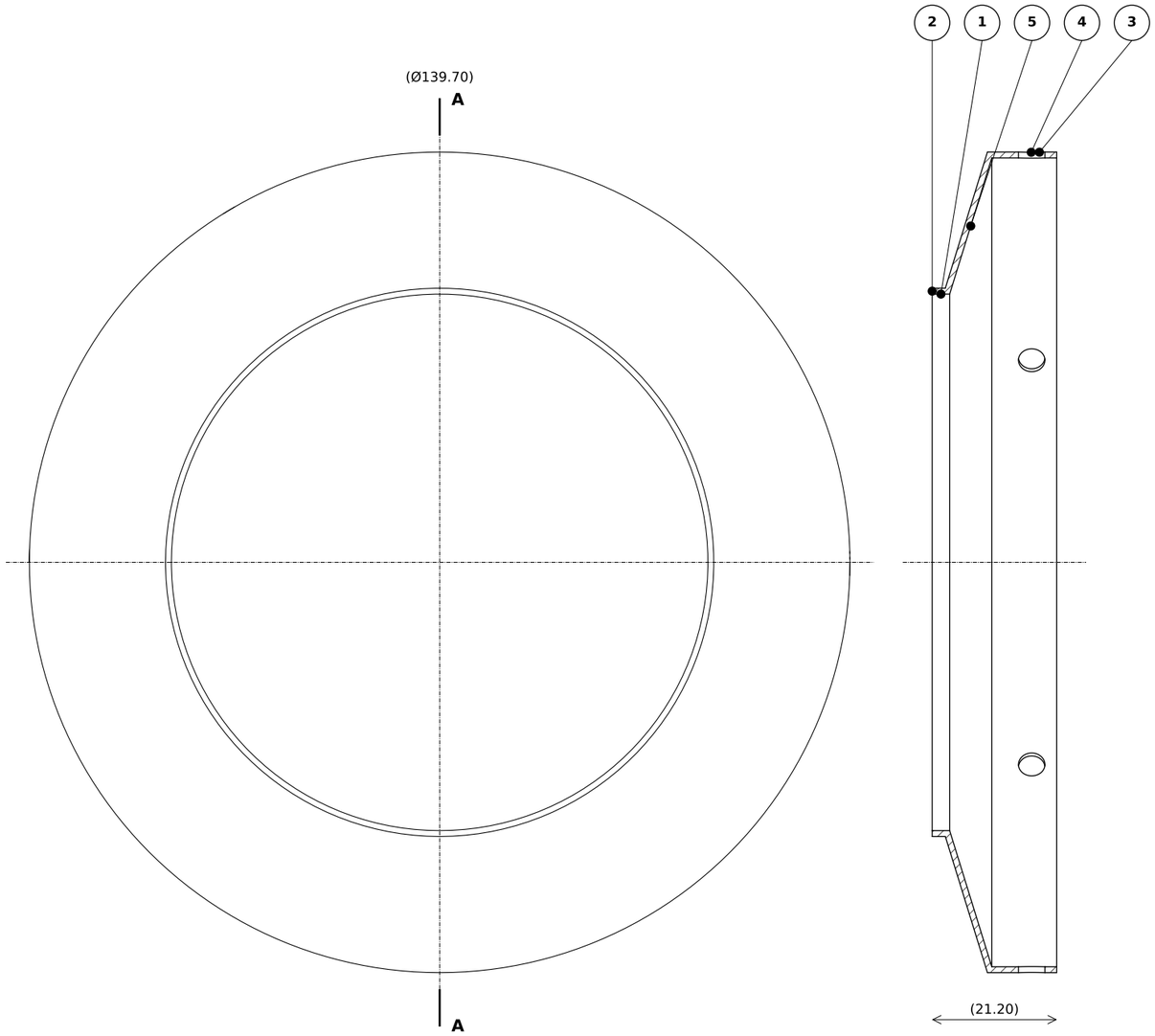

VIEW FROM THE INLET

SECTION A-A

REQUIREMENTS

1 A: collar bore Ø91.34 +0.05/0, over the guide vane ring's shroud

2 Collar front face square to A within 0.1: bears on the vane ring's shoulder

3 Band OD Ø139.70 ±0.05, in the case's bore

4 6× Ø4.5 radial through the band, equally spaced, 16.9 from the collar face, drilled after spinning: the case screws pass through into the nozzle's weld nuts

5 Spun from one 1 mm 321 disc (flat.py gives the blank); the centre trimmed

NOTES

1. Model is master: sizes not called out come from closure_ring.step, at the general tolerance.
2. Break sharp edges 0.1–0.3 unless noted. No burrs. No tool marks across sealing or seating faces.
3. Surface finish Ra 1.6 µm unless noted. Threads to ISO 965 (metric fine).
4. Inspection report, CMM and material certificates are add-ons on the quote.

HIGHLAND Turbojet, 170 N class

closure_ring.step · highlandmetal.ca

PART: Closure ring	PART NUMBER: HL-TJ-18		REVISION: A
MATERIAL: Stainless 321 sheet (ASTM A240), annealed			
FINISH: None, as machined		HEAT TREAT: None	
TOLERANCE UNLESS NOTED: ±0.13 mm (±0.005 in) unless noted; angles ±0.5°			
QUANTITY: 1 per engine	MASS: 114.5 g		SCALE: 1:1
UNITS: mm	PROJECTION: Third angle	DATE: 2026-11-20	SHEET: A3, 1 of 1