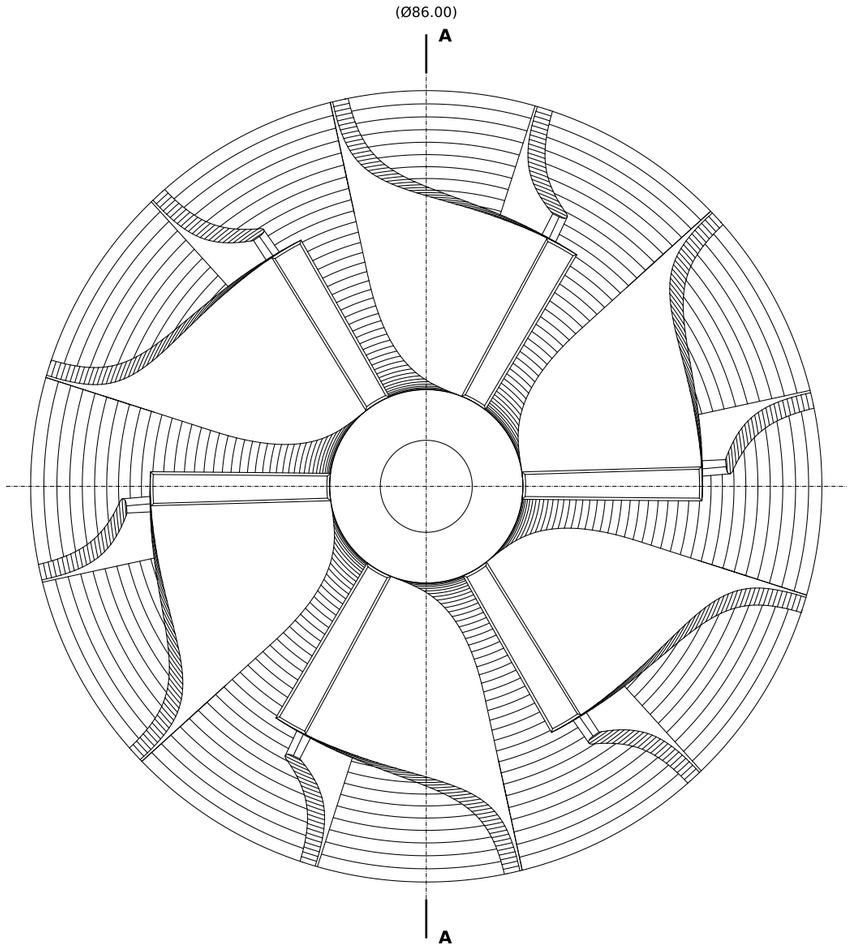

VIEW FROM THE INLET

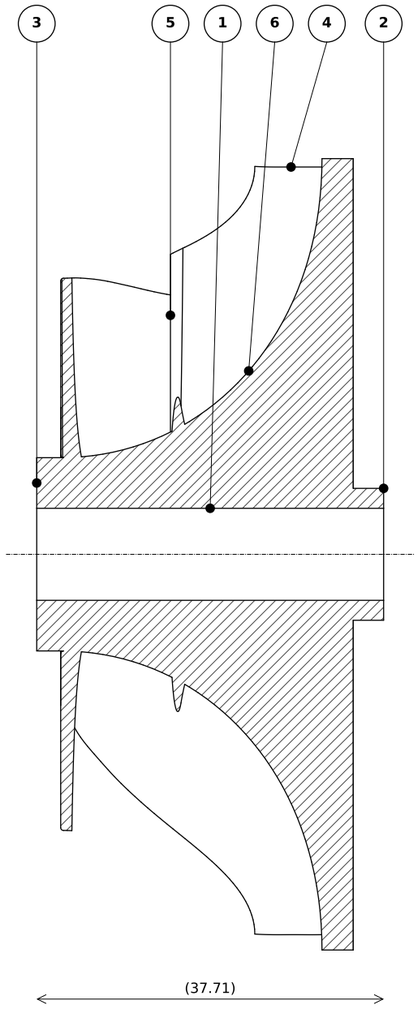

SECTION A-A

REQUIREMENTS

1 A: bore Ø10 H6 (10.000–10.009); Ra 0.4

2 Boss back face: perpendicular 0.003 to A (bears on the front bearing's inner ring)

3 Front face: parallel 0.003 to the back face (the nut bears here)

4 Blade tip contour: profile 0.03 to A (the 0.25 mm running clearance)

5 Blades: thickness ±0.05; leading edges full round; Ra 0.8

6 Blade roots R1.3 (R1.0–R1.5) where every blade meets the hub, left by an R1.3 ball cutter; the model shows them square

NOTES

1. Model is master: sizes not called out come from compressor_wheel.step, at the general tolerance.
2. Break sharp edges 0.1–0.3 unless noted. No burrs. No tool marks across sealing or seating faces.
3. Surface finish Ra 1.6 µm unless noted. Threads to ISO 965 (metric fine).
4. Rotor set: balanced as one assembly (the shaft-and-turbine weldment, the compressor wheel, both nuts), two planes, ISO 21940-11 G2.5 at 86,000 rpm. Scribe the angular position after balancing; reassemble to it.
5. Experimental use only. Sold under Highland's experimental-use agreement.
6. Inspection report, CMM and material certificates are add-ons on the quote.

HIGHLAND Turbojet, 170 N class

compressor_wheel.step · highlandmetal.ca

PART Compressor wheel	PART NUMBER HL-TJ-02		REVISION A
MATERIAL Aluminum 7075-T651 (ASTM B211 bar)			
FINISH None, as machined		HEAT TREAT None	
TOLERANCE UNLESS NOTED ±0.13 mm (±0.005 in) unless noted; angles ±0.5°			
QUANTITY 1 per engine	MASS 171.2 g		SCALE 1.5:1
UNITS mm	PROJECTION Third angle	DATE 2026-11-20	SHEET A3, 1 of 1