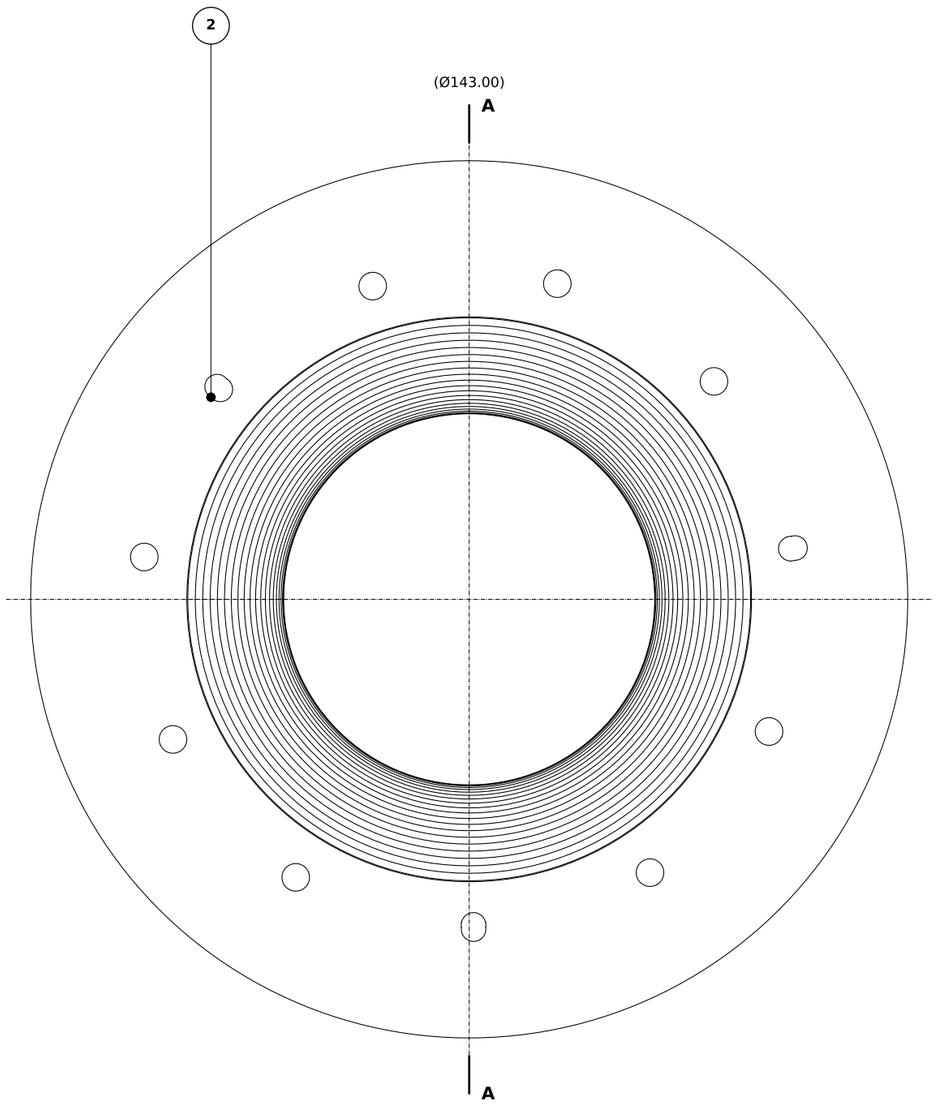

VIEW FROM THE INLET

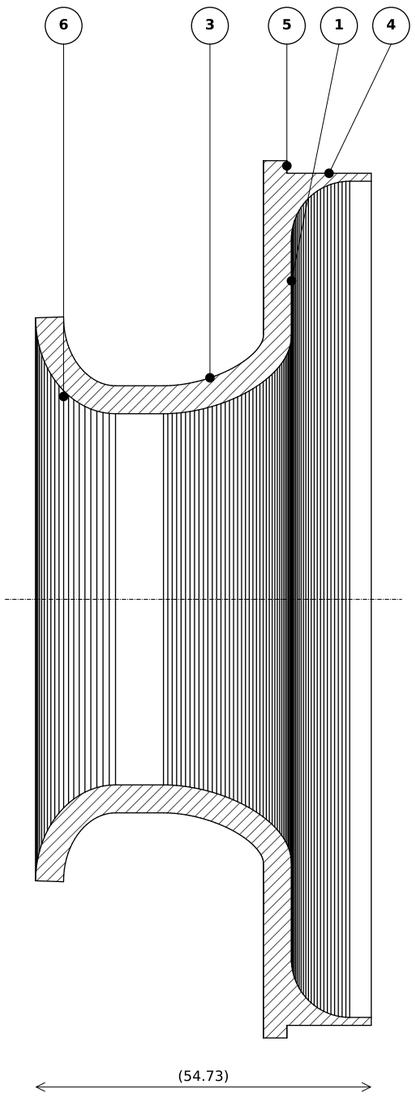

SECTION A-A

REQUIREMENTS

1 A: diffuser seat face, turned: flat 0.02

2 On Ø106.8, one per wedge: 8× Ø4.5 through for M4 screws (positions ±0.1); B: 3× radial slots 4.00 +0.02/0 wide, 4.7 long along the radius, milled after turning, at wedges 1, 5, 8 as modelled, centre planes through the axis within 0.02: they key the cover to the diffuser's axis as it grows

3 Shroud contour: profile 0.05 to A and B, turned (the 0.25 mm running clearance to the wheel); Ra 0.8

4 Spigot Ø138.90 ±0.05, turned: 0.45 mm a side clear of the case, which it doesn't locate in (the plastic grows more)

5 Case seat face: parallel 0.05 to A

6 Inlet lip: full radius as modelled, sanded smooth (Ra 3.2); its wall 4.6 mm as modelled, nowhere under 2

NOTES

1. Model is master: sizes not called out come from front_cover.step, at the general tolerance.
2. Break sharp edges 0.1–0.3 unless noted. No burrs. No tool marks across sealing or seating faces.
3. Surface finish Ra 1.6 µm unless noted. Threads to ISO 965 (metric fine).
4. Printed in-house in ULTEM 1010, solid (100% infill), axis vertical (layers across the axis), from dried filament. Then the seat faces, spigot and shroud are turned, and the three slots milled in the same fixture.
5. Fixing: 8 M4 A2-70 screws, each with 3 DIN 6796 size-4 conical spring washers in series on an ISO 7093 M4 large washer; 1.0 N·m. Three ISO 8734 4 × 10 m6 dowels (in the diffuser) run in the slots.
6. Before every run: look over the lip and the shroud under a light. A crack or a lifted layer scraps the cover; nothing printed may shed ahead of the wheel.
7. Running rules: no runs above 35 °C ambient; after every shutdown the ECU spins the rotor on the starter until the exhaust is under 100 °C.
8. Inspection report, CMM and material certificates are add-ons on the quote.

HIGHLAND Turbojet, 170 N class

front_cover.step · highlandmetal.ca

PART: Front cover	PART NUMBER: HL-TJ-01		REVISION: A
MATERIAL: ULTEM 1010 (PEI), printed solid in-house, axis vertical, then finish-turned			
FINISH: None, as machined		HEAT TREAT: None	
TOLERANCE UNLESS NOTED: ±0.13 mm (±0.005 in) unless noted; angles ±0.5°			
QUANTITY: 1 per engine	MASS: 144.5 g		SCALE: 1:1
UNITS: mm	PROJECTION: Third angle	DATE: 2026-11-20	SHEET: A3, 1 of 1