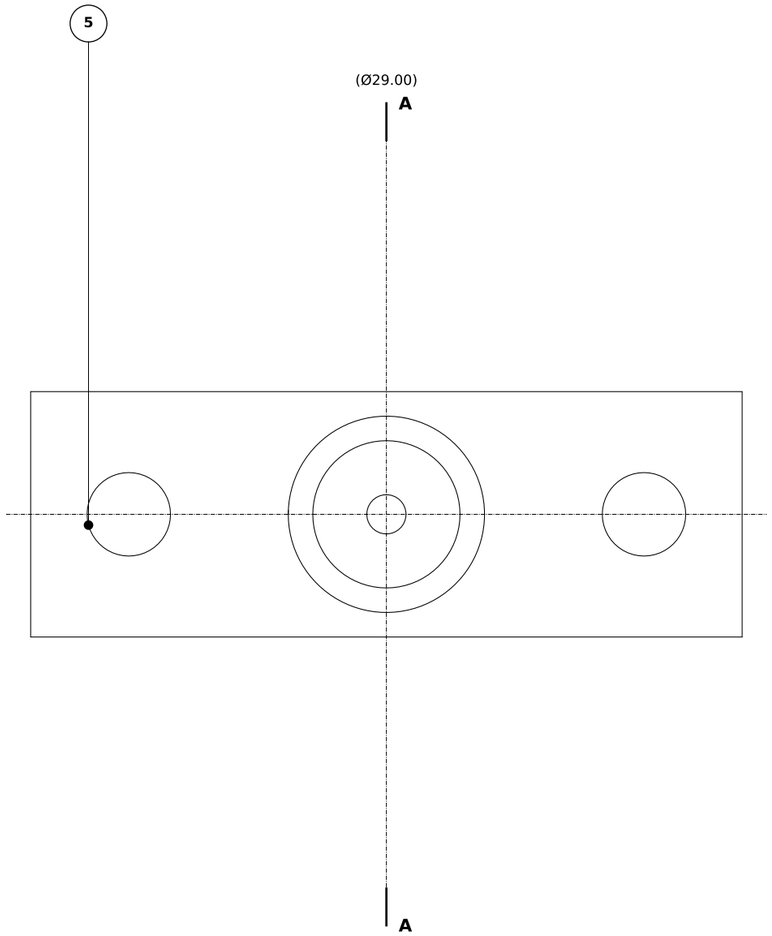

VIEW FROM THE INNER END

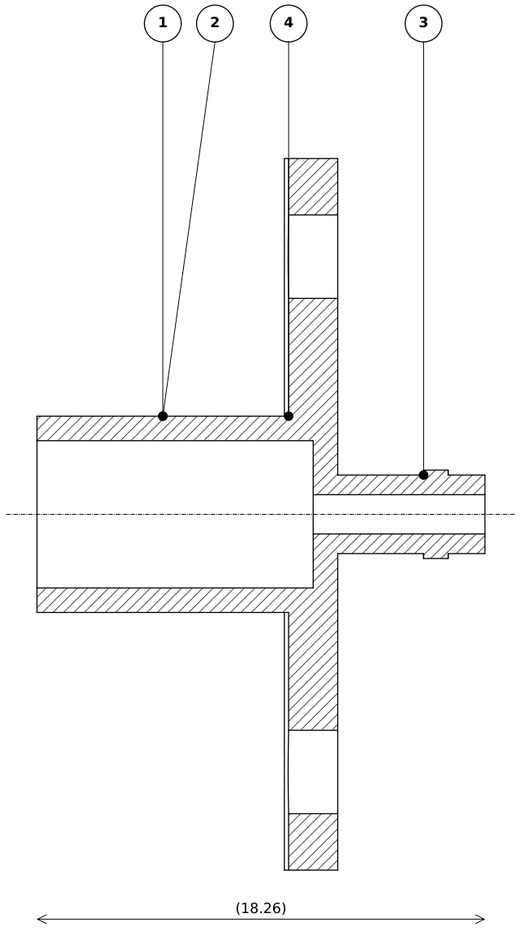

SECTION A-A

REQUIREMENTS

1 Bore Ø6 H8 (6.000–6.018), reamed, 11.3 deep from the inner end; Ra 0.8: the nipple's O-ring seals here

2 Spigot Ø8.00 −0.05/−0.10 (7.90–7.95), through the case's Ø8.1 hole

3 Barb Ø3.2 with a Ø3.6 ridge, for 4 × 2.5 mm fuel tube; Ø1.6 through

4 Flange underside: concave R71.50 +0.1/0, sits on the case

5 2× Ø3.4 through for the case's M3 studs, 21.0 apart along the axis ±0.1

NOTES

1. Model is master: sizes not called out come from gland.step, at the general tolerance.
2. Break sharp edges 0.1–0.3 unless noted. No burrs. No tool marks across sealing or seating faces.
3. Surface finish Ra 1.6 µm unless noted. Threads to ISO 965 (metric fine).
4. Three per engine: kerosene, the starting gas and the lube line.
5. Inspection report, CMM and material certificates are add-ons on the quote.

HIGHLAND Turbojet, 170 N class

gland.step · highlandmetal.ca

PART Line gland	PART NUMBER HL-TJ-21		REVISION A
MATERIAL Stainless 304 (ASTM A276 bar)			
FINISH None, as machined		HEAT TREAT None	
TOLERANCE UNLESS NOTED ±0.13 mm (±0.005 in) unless noted; angles ±0.5°			
QUANTITY 3 per engine	MASS 6.3 g		SCALE 4:1
UNITS mm	PROJECTION Third angle	DATE 2026-11-20	SHEET A3, 1 of 1