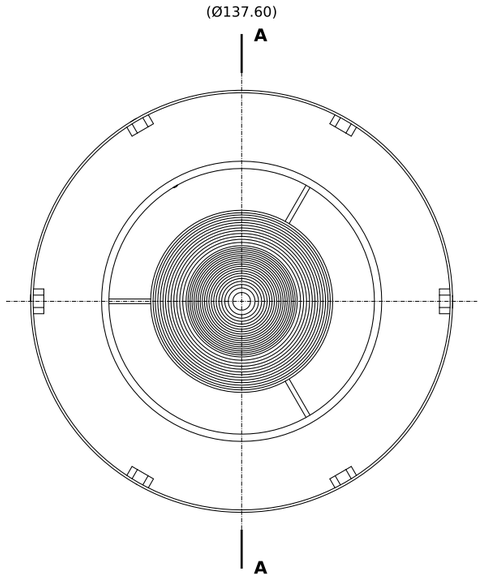

VIEW FROM THE INLET

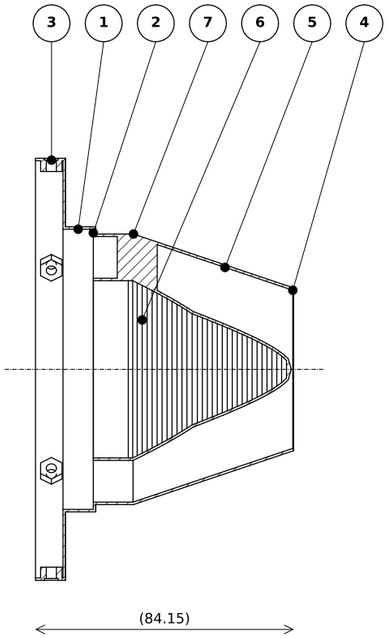

SECTION A-A

REQUIREMENTS

1. A: socket bore Ø91.34 +0.05/0, over the guide vane ring's shroud
2. Step face square to A within 0.1: it butts the shroud's end, the duct's bore flush with the shroud
3. Band OD Ø137.60 ±0.05, inside the closure ring's band; 6× Ø4.5 radial on the case screws, and 6 DIN 929 M4 stainless weld nuts projection-welded inside, on the holes
4. Exit Ø51.52 ±0.10 (sets the engine's match: thrust and exhaust temperature)
5. Spun from one 0.8 mm 321 disc: band, disc, socket, step and duct; the exit trimmed
6. Tail cone spun from 0.8 mm 321; 3 struts 1.5 mm 321, laser-cut, TIG-welded to the tail cone and the duct
7. Ø1.6 radial hole for the exhaust thermocouple, at 60° (between struts), 22.9 from the disc's front face

NOTES

1. Model is master: sizes not called out come from nozzle.step, at the general tolerance.
2. Break sharp edges 0.1–0.3 unless noted. No burrs. No tool marks across sealing or seating faces.
3. Surface finish Ra 1.6 µm unless noted. Threads to ISO 965 (metric fine).
4. Inspection report, CMM and material certificates are add-ons on the quote.

HIGHLAND Turbojet, 170 N class

nozzle.step · highlandmetal.ca

PART Exhaust nozzle	PART NUMBER HL-TJ-19		REVISION A
MATERIAL Stainless 321 sheet (ASTM A240), annealed			
FINISH None, as machined		HEAT TREAT None	
TOLERANCE UNLESS NOTED ±0.13 mm (±0.005 in) unless noted; angles ±0.5°			
QUANTITY 1 per engine	MASS 261.4 g		SCALE 1:2
UNITS mm	PROJECTION Third angle	DATE 2026-11-20	SHEET A3, 1 of 1