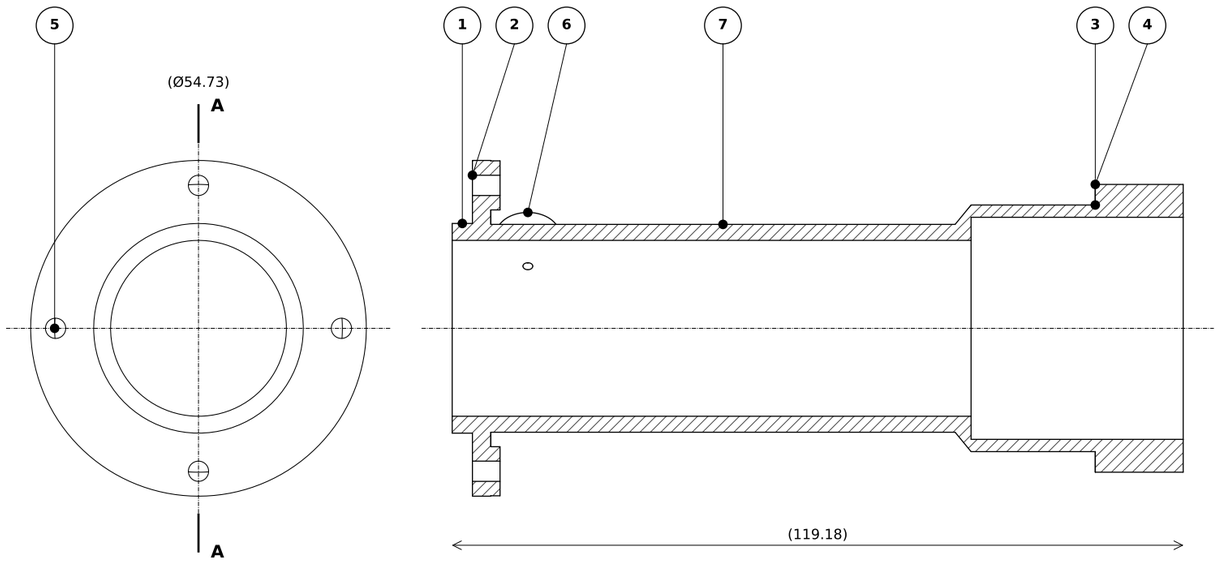

VIEW FROM THE INLET

SECTION A-A

REQUIREMENTS

1 A: spigot Ø34.20 −0.01/−0.04, into the diffuser's bearing bore

2 Flange face: perpendicular 0.01 to A

3 Rear bearing cartridge bore Ø36.20 H8 (36.200–36.239), coaxial Ø0.02 to A; Ra 0.8

4 Guide vane ring pilot Ø46.91 0/−0.03, coaxial Ø0.02 to A

5 4× pads Ø8 × 1.5 on the flange's back, each M4×0.7-6H through flange and pad (4.5 of thread), on Ø46.6 at 0°, 90°, 180°, 270° ±0.1

6 Lube port Ø1.6, radial through the boss, 12.3 from the spigot's front face; socket Ø3.05 +0.03/0, 3.0 deep from the boss's face, for the 3 mm lube tube (pressed in with a 230 °C retaining compound)

7 Tube wall 2.6 ±0.1

NOTES

1. Model is master: sizes not called out come from tunnel.step, at the general tolerance.
2. Break sharp edges 0.1–0.3 unless noted. No burrs. No tool marks across sealing or seating faces.
3. Surface finish Ra 1.6 µm unless noted. Threads to ISO 965 (metric fine).
4. Inspection report, CMM and material certificates are add-ons on the quote.

HIGHLAND Turbojet, 170 N class

tunnel.step · highlandmetal.ca

PART Shaft tunnel	PART NUMBER HL-TJ-04		REVISION A
MATERIAL Stainless 304 (ASTM A276 bar)			
FINISH None, as machined		HEAT TREAT None	
TOLERANCE UNLESS NOTED ±0.13 mm (±0.005 in) unless noted; angles ±0.5°			
QUANTITY 1 per engine	MASS 332.4 g		SCALE 1:1
UNITS mm	PROJECTION Third angle	DATE 2026-11-20	SHEET A3, 1 of 1